Datasheet

Article Number: 031828

Reed switch

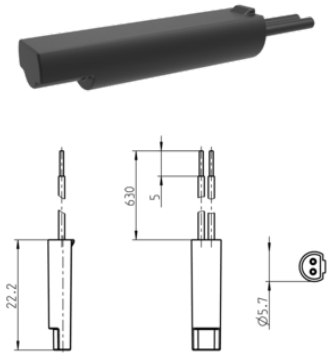

Description	- noncontact switch (normally open) for operating signal currents of up to 0.5A
Categories	Accessories
Standards	ISO 11446
Industries	Cars

Packaging and Order Details

Packaging	without packaging

Design Features

Type of accessory	reed switch

Miscellaneous

Suitable for	socket housing (part no. 382595, 382597)

Norms and Standards

Protection	IP 67