Datasheet

Article Number: 026465

9P/12V «ISOBUS (IBRC)» unlocking tool for contact sleeves (ISO 11783-2)

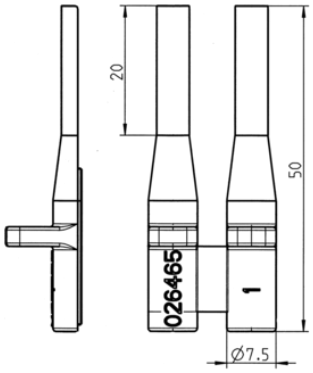

Categories	Socket , Accessories
Standards	ISO 11783-2
Industries	Agriculture
Brand	ISOBUS (IBRC)

Electrical Details and Temperature Resistance

Voltage [in V]	12

Packaging and Order Details

Packaging	without packaging

Design Features

Type of accessory	unlocking tool for contact sleeves

Miscellaneous

Suitable for	contact sleeve (part no. 382100)

Material

Housing material	reinforced composite

Connectivity

No. of poles	09