Datasheet

Article Number: 025469

Strain relief.

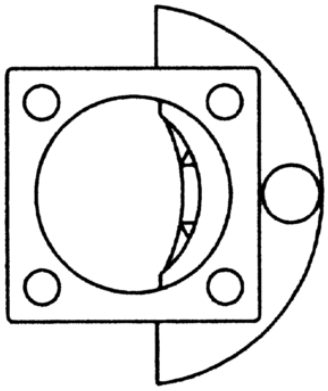

Categories	Accessories , Plug
Standards	ISO 7638-1 , ISO 7638-2 , ISO 25981
Industries	Commercial vehicles

Electrical Details and Temperature Resistance

Voltage [in V]	12 , 24

Packaging and Order Details

Packaging	without packaging

Design Features

Type of accessory	strain relief

Connectivity

No. of poles	07

Norms and Standards

Addition to standard	ABS , EBS