Datasheet

Article Number: 036959

7P/12V Seal (ISO 3732 - Type S, ISO 1724 - Type N)

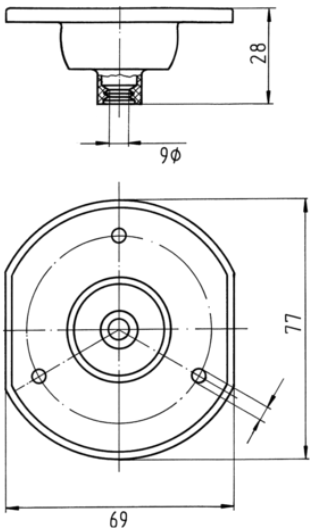

Categories	Socket , Accessories , Seal
Standards	ISO 3732 - Type S , ISO 1724 - Type N
Industries	Cars , Agriculture

Electrical Details and Temperature Resistance

Voltage [in V]	12

Packaging and Order Details

Packaging	without packaging

Design Features

Design/Version	flat design
Type of seal	seal

Material

Material of seal	CR

Connectivity

Cable outlet	cable outlet 180°
No. of poles	07
No. of seal outlets	single
Set of seal outlets	centered, 180°

Measures and Dimensions

For cable diameter	6,00mm