Datasheet

Article Number: 026230

7P/12, 24V «WeatherLock™» Seal (ISO 3731 - Type S, ISO 1185 - Type N, SAE J560 ABS)



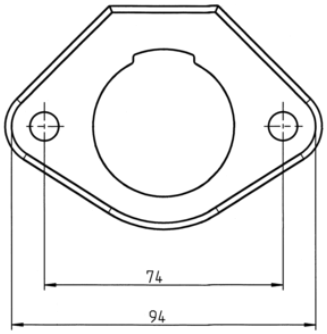

Categories	Socket , Accessories
Standards	ISO 3731 - Type S , ISO 1185 - Type N , SAE J560
Industries	Commercial vehicles
Brand	WeatherLock™

Electrical Details and Temperature Resistance

Voltage [in V]	12 , 24

Packaging and Order Details

Packaging	without packaging

Design Features

Type of accessory	seal
Type of seal	seal

Connectivity

No. of poles	07

Norms and Standards

Addition to standard	ABS