Datasheet

Article Number: 025140

13, 15P/24V strain relief (ISO 12098, ISO 12098 - 13P version)

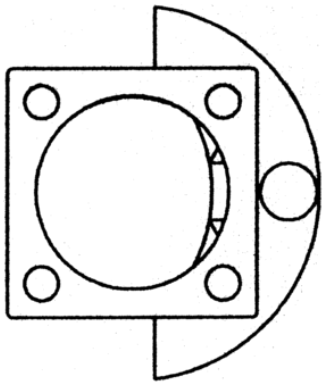

Categories	Accessories , Plug
Standards	ISO 12098 , ISO 12098 - 13P version
Industries	Commercial vehicles

Electrical Details and Temperature Resistance

Voltage [in V]	24

Packaging and Order Details

Packaging	without packaging

Design Features

Type of accessory	strain relief

Connectivity

No. of poles	13 , 15